FROM:

DataPool Server Disk Partitioning Diagram
e0dps01

This is not posted!

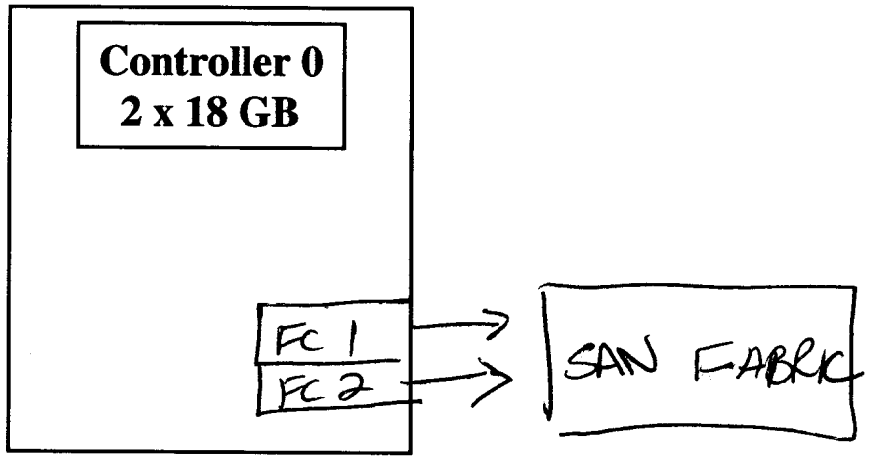

* see 922-TDE-044 for SAN configuration

DataPool Server Disk Partitioning Diagram
e0dps01

Internal Disks

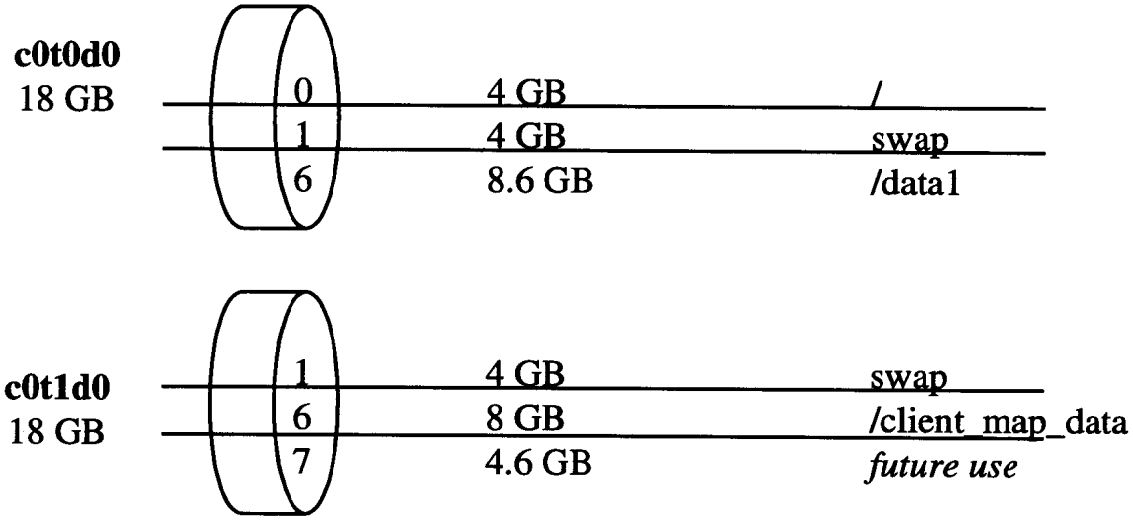

From

Metadata Server Disk Partitioning Diagram
e0sas01

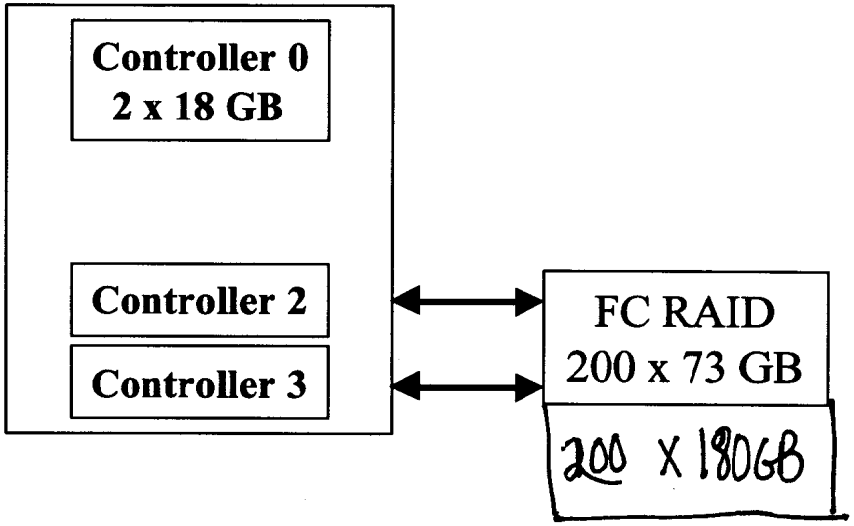

Metadata Server Disk Partitioning Diagram
e0sas01

Internal Disks

4 x 73 GB
RAID 0+1
c2t0d9

136 GB — *QFS metadata device*

9+1 x 180GB &
9+1 x 73 GB
RAID 5
18 ~~19~~ sets of 73GB and 18 sets of 180GBs
c2t0d1✓ c2t0d3✓
c2t0d5✓ c2t0d7✓
c2t1d1✓ c2t1d3✓
c2t1d5✓ c2t1d7✓
~~c2t1d9~~ c3t0d0
c3t0d2 c3t0d4
c3t0d6 c3t0d8
c3t1d0✓ c3t1d2✓
c3t1d4✓ c3t1d6✓
c3t0d8✓

~~11.6~~ TB — /datapool
38 TB

180GB LUNs TBD

Metadata Server Disk Partitioning Diagram
e0sas01

Internal Disks

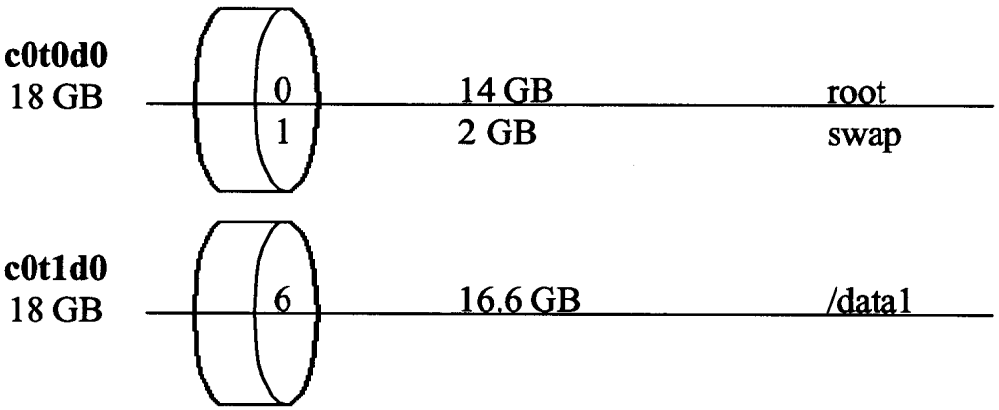

FROM

PDS Server Disk Partitioning Diagram
e0dig06

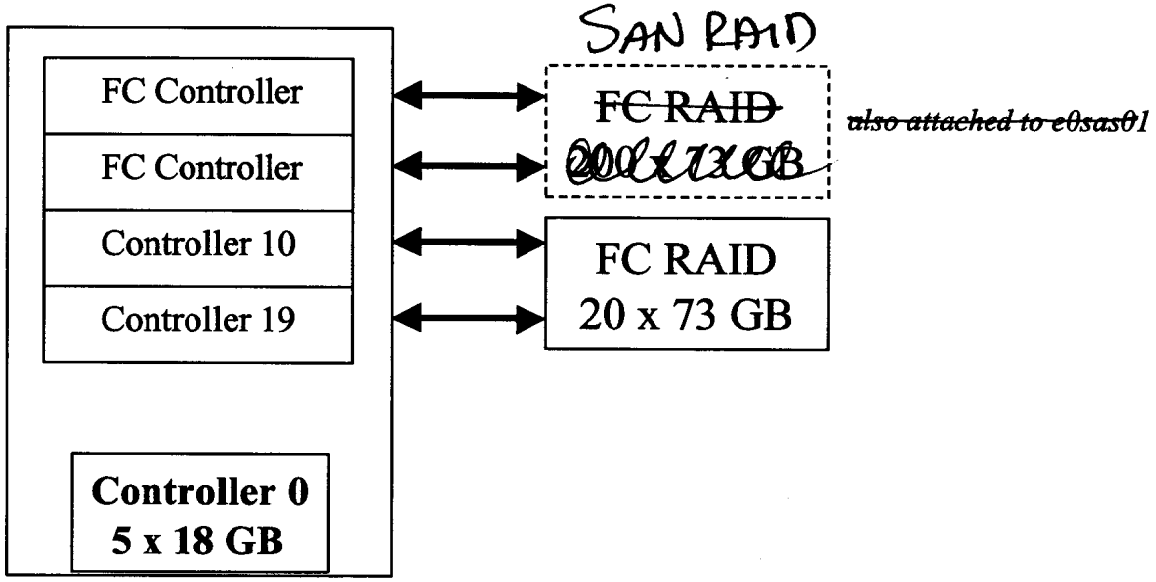

* see 922-TDE-044 for SAN configuration

PDS Server Disk Partitioning Diagram
e0dig06

External Disks

9+1 x 73 GB
RAID 5
19 sets

11.6 TB

/datapool

PDS Server Disk Partitioning Diagram
e0dig06

External Disks

dks19d011 dks19d013 dks19d015		203 GB	xlv=pdsis	/pdsis
dks10d217 dks10d219 dks10d2111		203 GB	xlv=pdssa	/pdssa

PDS Server Disk Partitioning Diagram
e0dig06

Internal Disks

dks0d1
1 x 18 GB
Independent
Disk

Slice	Start block	Total blocks	Start MB	Total MB	XLV Name	Mount	Type
0	4100096	14336000	2002	7000		root	xfs
1	4096	4096000	2	2000		swap	raw
7	18436096	17125376	9002	8362		/data1	xlv
8	0	4096	0	2			volhdr
10	0	35563040	0	17365			volume

dks0d2
1 x 18 GB
Independent
Disk

Slice	Start block	Total blocks	Start MB	Total MB	XLV Name	Mount	Type
0	4096	17817600	2	8700		/data2	xlv
7	17821696	17739776	8702	8662		/data3	xlv
8	0	4096	0	2			volhdr
10	0	35563040	0	17365			volume

dks0d3
18 GB

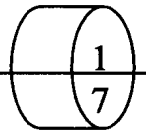

2.5 GB xlv=orb1 /or1
future use

dks0d4
18 GB

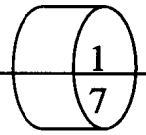

2.5 GB xlv=orb1 /or2
future use

dks0d5
18 GB

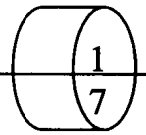

2.5 GB xlv=orb1 /or3
future use

From:

FSMS Svr Disk & RAID Partitioning Diagram (e0drg11, e0drg12)

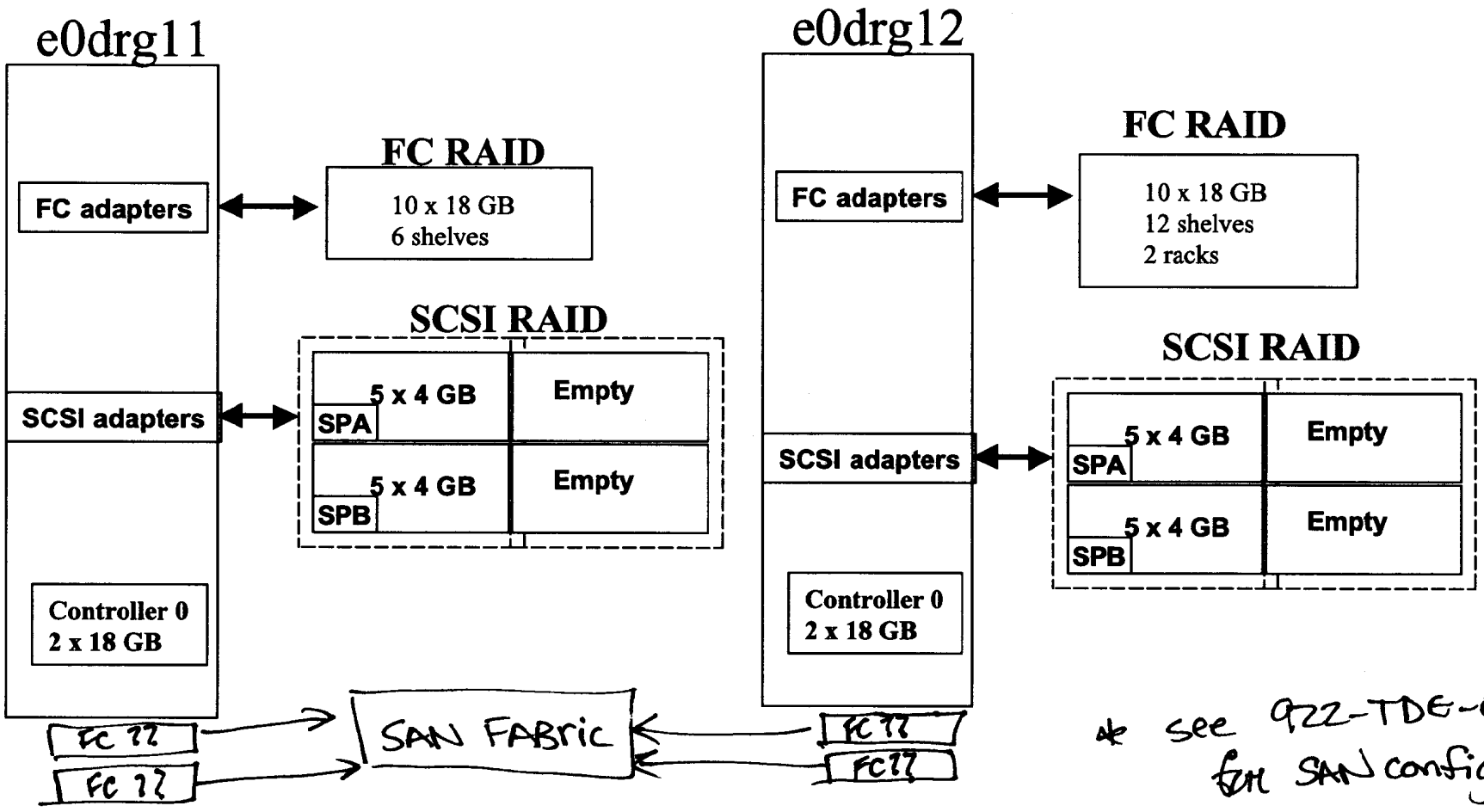

* see 922-TDE-044 for SAN configurati

FSMS Svr Disk & RAID Partitioning Diagram (e0drg11, e0drg12)

External Disks, e0drg11

2 x 4 GB RAID 1	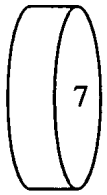	4 GB	xlv=amassjnl	/amassjnl
2 x 4 GB RAID 1	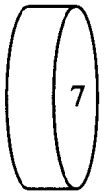	4 GB	xlv=amassfsdb	/amassdb
8+1 x 18 GB (6 sets) RAID 3	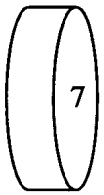	805 GB	xlv=amasscache	
8+1 x 18 GB (2 sets) RAID 3		268 GB	xlv=l0_buffer	/l0_buffer

FSMS Svr Disk & RAID Partitioning Diagram (e0drg11, e0drg12)

External Disks, e0drg12

2 x 4 GB RAID 1	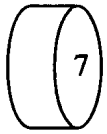	4 GB	xlv=amassjnl	/amassjnl
2 x 4 GB RAID 1	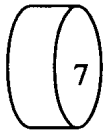	4 GB	xlv=amassfsdb	/amassdb
8+1 x 18 GB (4 sets) RAID 3	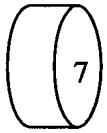	2 TB	rxlv=amasscache1	
8+1 x 18 GB (4 sets) RAID 3	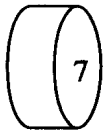	2 TB	rxlv=amasscache2	
8+1 x 18 GB (4 sets) RAID 3	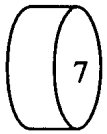	2 TB	rxlv=amasscache3	
8+1 x 18 GB (4 sets) RAID 3	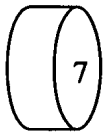	.5 TB	xlv=l0_buffer	/l0_buffer

FSMS Svr Disk & RAID Partitioning Diagram (e0drg11, e0drg12)

Internal Disks

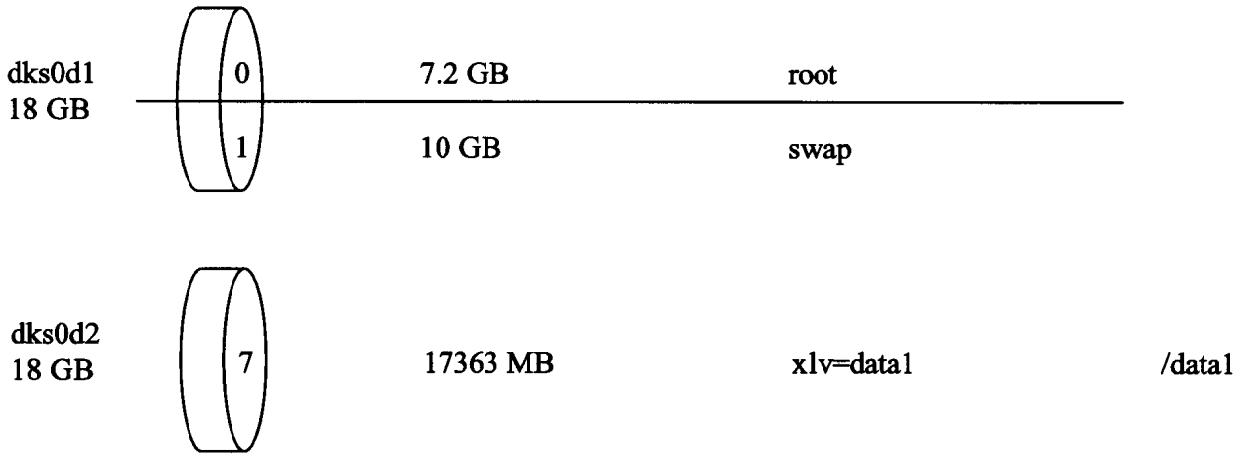

From

APC Server Disk & RAID Partitioning Diagram (e0acg11)

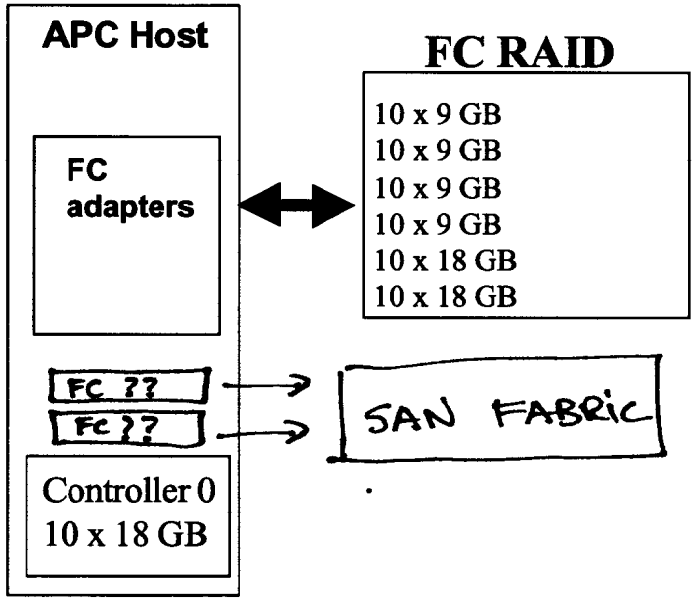

* See 922-TDE-044 for SAN configuration

APC Server Disk & RAID Partitioning Diagram (e0acg11)

External Disks

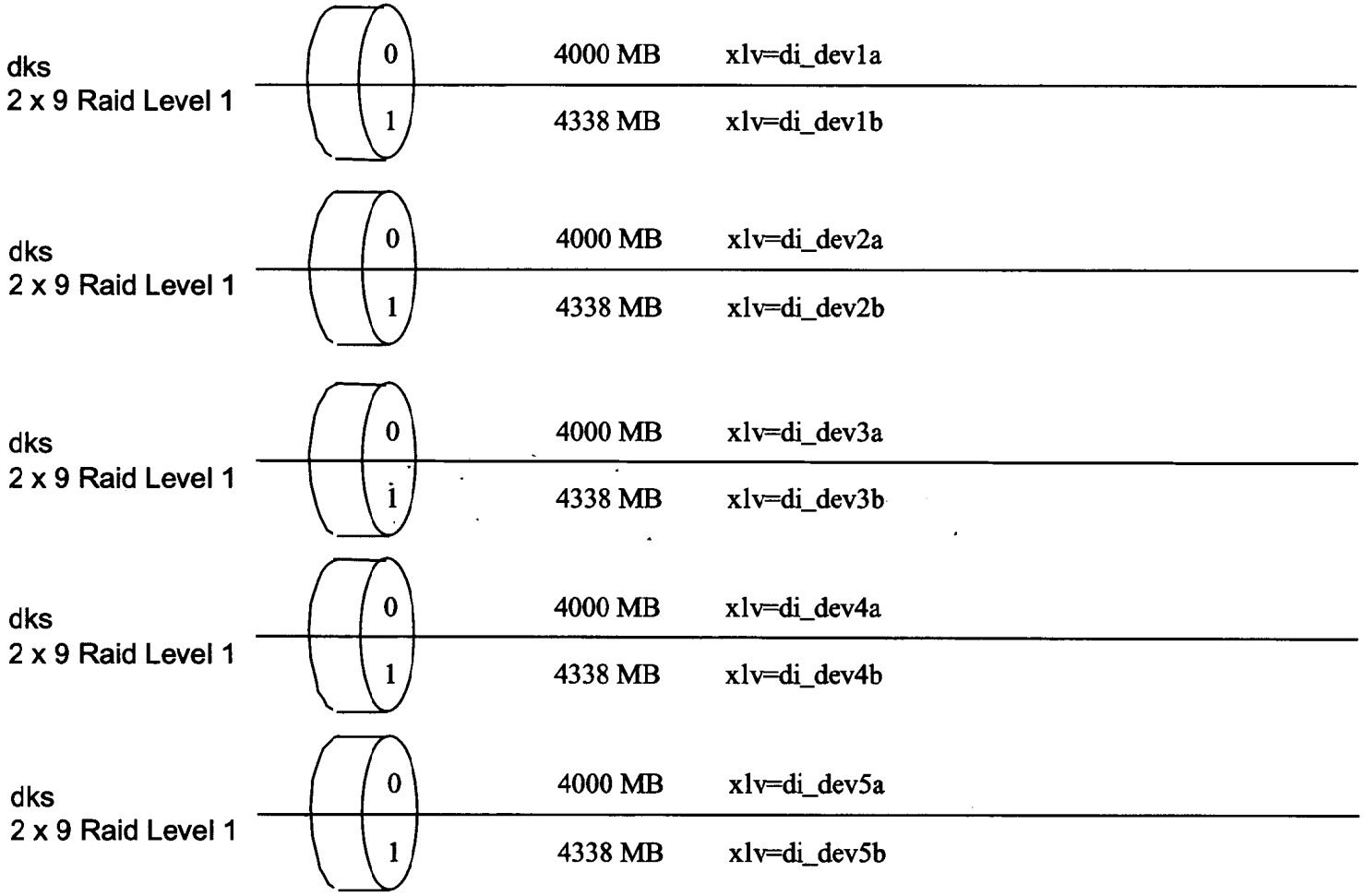

APC Server Disk & RAID Partitioning Diagram (e0acg11)

External Disks

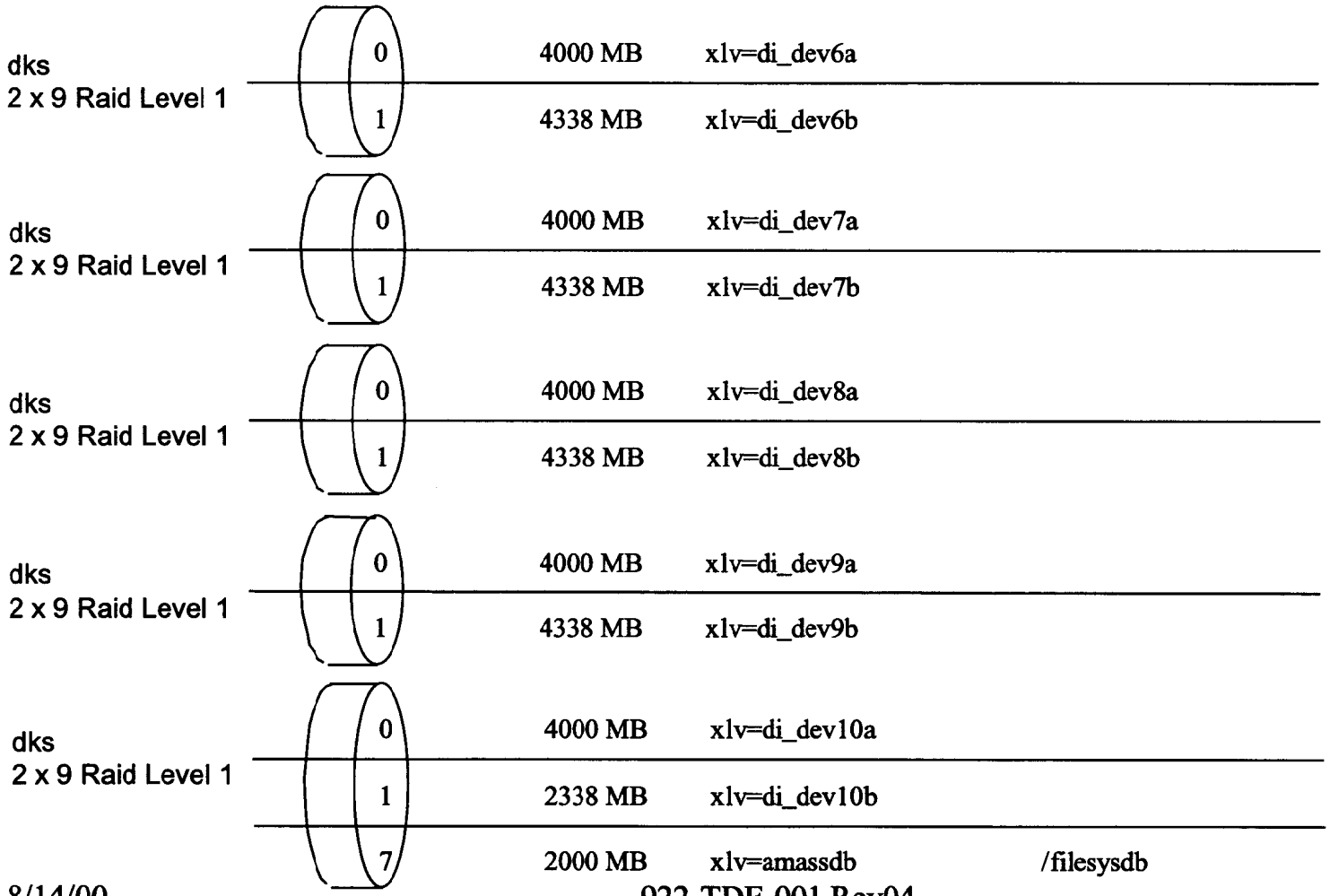

APC Server Disk & RAID Partitioning Diagram (e0acg11)

External Disks

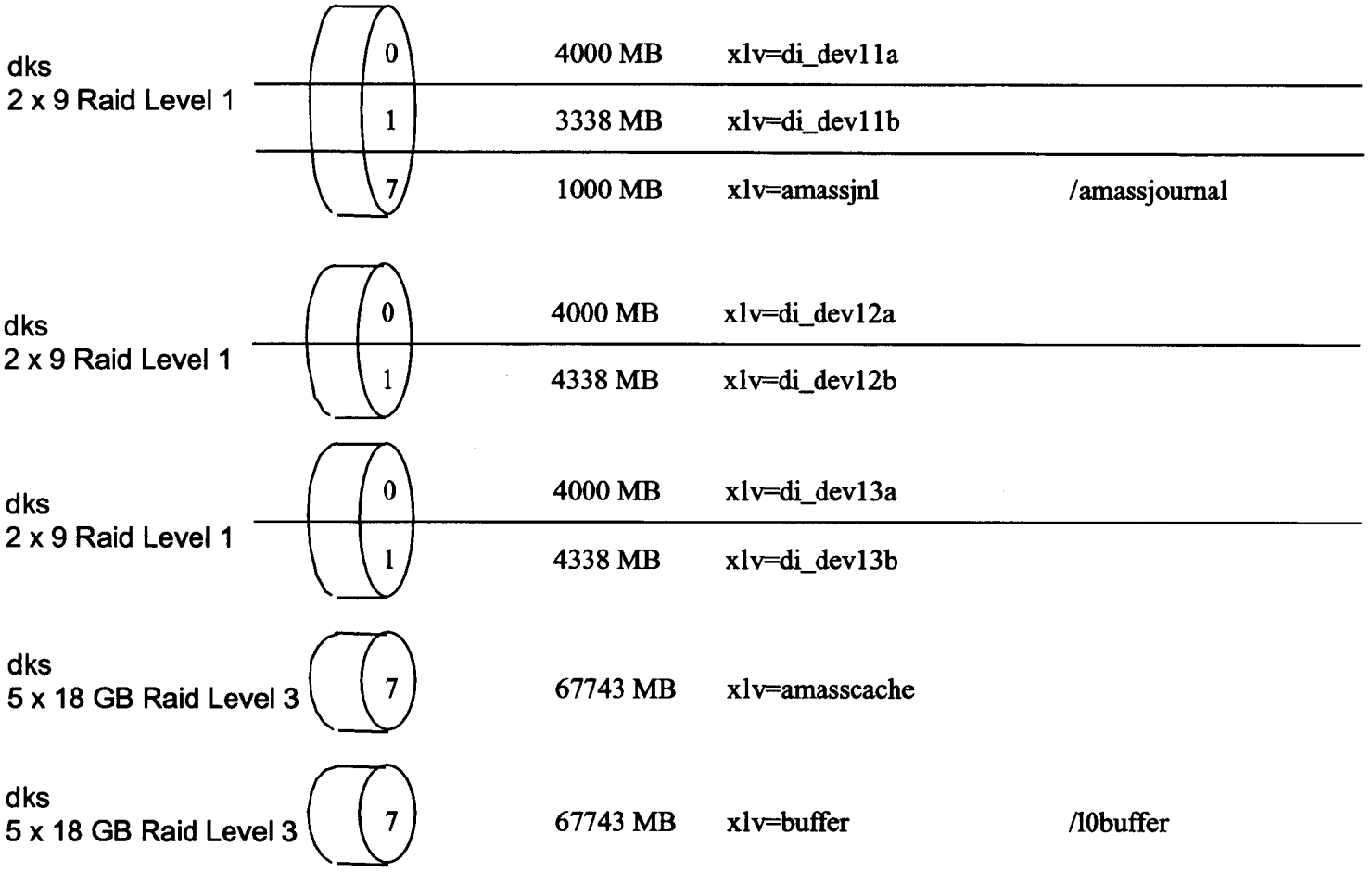

APC Server Disk & RAID Partitioning Diagram (e0acg11)

External Disks

dks 9 GB independent disk	7	8338 MB	xlv=sybasefs1	/sybasefs1
dks 9 GB independent disk	7	8338 MB	xlv=sybasefs2	/sybasefs2
dks 9 GB independent disk	7	8338 MB	xlv=sybasefs3	/sybasefs3
dks 8 x 18 GB RAID 3	7	135,488 MB	xlv=ftppull	/user_pull
dks 2 x 9 GB RAID 1	7	8338 MB	xlv=sybasefs	/sybasefs
dks 2 x 9 Raid Level 1	0	4000 MB	xlv=testmode_log_dev1	
	1	4338 MB	xlv=log_dev2	

APC Server Disk & RAID Partitioning Diagram (e0acg11)

External Disks

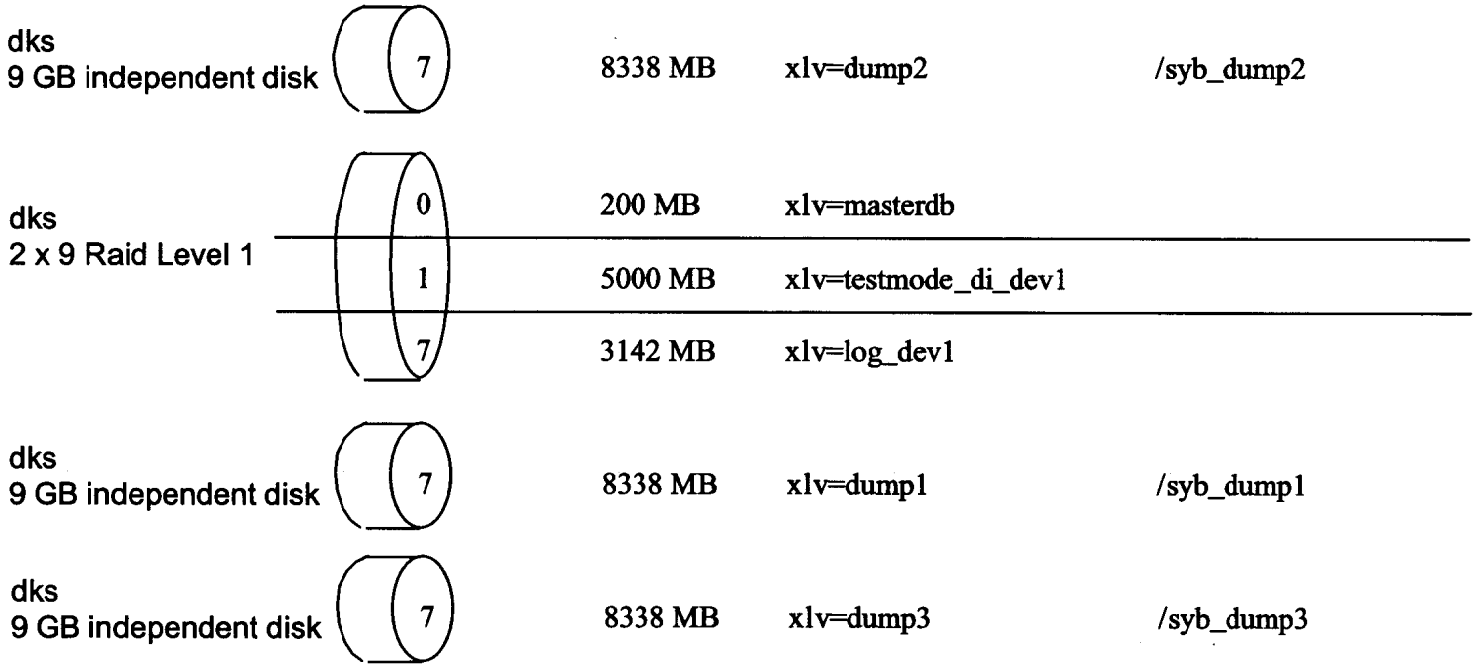

APC Server Disk & RAID Partitioning Diagram (e0acg11)

Internal Disks

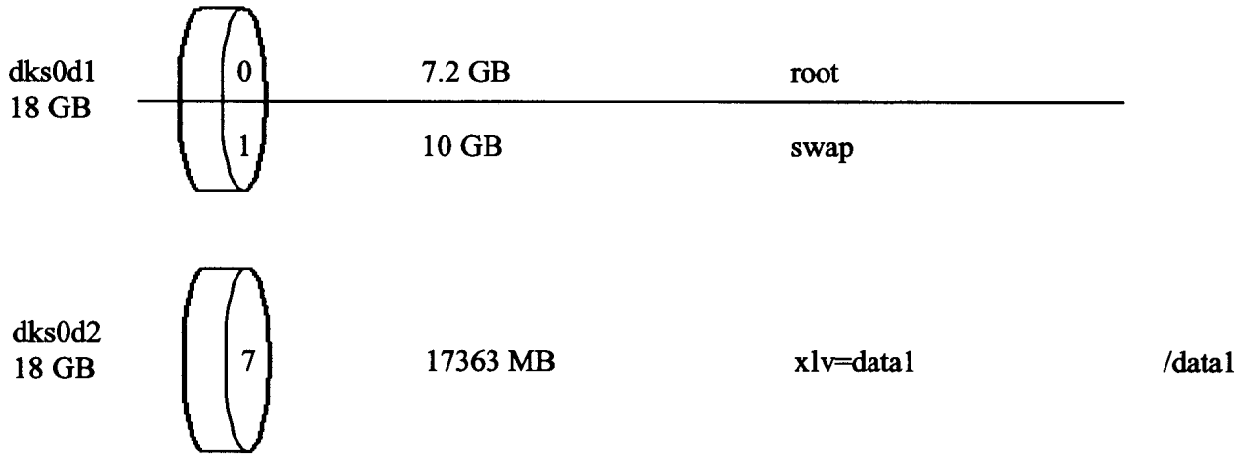

APC Server Disk & RAID Partitioning Diagram (e0acg11)

Internal Disks

dks0d3 18 GB		16934 MB	xlv=syb_dump4	/syb_dump4
dks0d4 18 GB		16934 MB	xlv=syb_dump5	/syb_dump5
dks16d1 18 GB		16934 MB	xlv=syb_dump6	/syb_dump6
dks16d2 18 GB		16934 MB	xlv=syb_dump7	/syb_dump7
dks16d3 18 GB		16934 MB	xlv=syb_dump8	/syb_dump8
dks19d1 18 GB		16934 MB	xlv=syb_dump9	/syb_dump9
dks19d2 18 GB		16934 MB	xlv=syb_dump10	/syb_dump10
dks19d3 18 GB		16934 MB	xlv=syb_dump11	/syb_dump11

From:

COTS/FREE/SHARE PRODUCT NAME	CUSTOM SW NAME	VERSION	CKSUM	ITEM SUBCLASS	CONTROL ITEM ID	RC	CSCI	ORG
TCP Wrappers		7.6		program	b00016305		MCI	MSS
Tivoli: Lightweight Client		3.6.3		program	b00083162		MCI	MSS
Tripwire		1.3.1		program	b00083174		MCI	MSS
Visual Workshop for C++		3.0		program	b00016397		DCCI	IDG
	pdps	6A		database	b00082240		PLANG	PLS
ssh secure shell cmrcl client		2.4		program	b00083340	A	DCCI	SED-HW
ssh secure shell cmrcl server		1.3.7		program	b00016258		DCCI	SED-HW

EDC DSS Subsystem

** e0acg11 ** ACMHW APC Server (P) b00080496

- - > APC Server (P) S/W bundle b00081374 <

COTS/FREE/SHARE PRODUCT NAME	CUSTOM SW NAME	VERSION	CKSUM	ITEM SUBCLASS	CONTROL ITEM ID	RC	CSCI	ORG
ClearCase		3.2.1		program	b00015005		MLCI	MSS
DCE Client		1.2.2a		program	b00072756		DCCI	IDG
EMACS		19.30.9		program	b00015242	A	DCCI	IDG
	EcDsScienceDataServer1	6A		database	b00082196	I	SDSRV	DSS
IRIX 6.5.6m		6.5.6m		OS	b00072777		DCCI	IDG
Legato Networker Client		6.0.2.Build.251		program	b00083212		MCI	MSS
MIPSpro C ++ Compiler		7.2.1.3m		program	b00014924		DCCI	IDG
MIPSpro C Compiler		7.2.1.3m		program	b00014873		DCCI	IDG
MIPSpro FORTRAN 77 Compiler		7.2.1.3m		program	b00015353		DCCI	IDG
MIPSpro FORTRAN 90 Compiler		7.2.1.3m		program	b00015383		DCCI	IDG
Network Time Services (NTP)		4.1		program	b00083620		DCCI	SED-HW
Open Client/C		12.0		program	b00015863		DCCI	DDM
PERL		5.005_03		program	b00015932	A	DCCI	IDG
ProDev Workshop		2.7		program	b00015990		DCCI	IDG
Spatial Query Server (SQS)		3.2.2		program	b00016181		DCCI	DDM
Sybase Adaptive Svr Enterprise		11.9.3 (EBF9743)		program	b00083218	P	DCCI	DDM
TCL/Tk		8.0_PL_4		program	b00015433		MCI	MSS
TCP Wrappers		7.6		program	b00016306		MCI	MSS
Tivoli: Lightweight Client		3.6.3		program	b00083164		MCI	MSS
Tripwire		1.3		program	b00016396		MCI	MSS
ssh secure shell cmrcl client		2.4		program	b00083342		DCCI	SED-HW
ssh secure shell cmrcl server		1.3.7		program	b00016256	A	DCCI	SED-HW

- - > APC Server (P) S/W bundle-EDC b00081376 <

COTS/FREE/SHARE PRODUCT NAME	CUSTOM SW NAME	VERSION	CKSUM	ITEM SUBCLASS	CONTROL ITEM ID	RC	CSCI	ORG
AMASS		5.1.1		program	b00083480		STMGT	SED-HW
BDS		2.1p0		program	b00072750		DCCI	SED-HW
SANergy		2.3.3		program	b00083585		SANSW	SYN

Version: See http://cmdm.east.hitc.com/baseline (Custom SW Lists button) for detailed versioning information about custom software
Ref Codes: A = automounted; I = remotely installed; P = platform; R = RAID (switchable); r = RAID (other)

02-031

--> Wkg Stor Host S/W bndl (S)-EDC b00082092 <

COTS/FREE/SHARE PRODUCT NAME	CUSTOM SW NAME	VERSION	CKSUM	ITEM SUBCLASS	CONTROL ITEM ID	RC	CSCI	ORG
BDS		2.1p0		program	b00072750		DCCI	SED-HW
HiPPI SW		3.3.1		program	b00015453			SED-HW

--> Wkg Stor Host S/W bundle (S) b00082096 <

COTS/FREE/SHARE PRODUCT NAME	CUSTOM SW NAME	VERSION	CKSUM	ITEM SUBCLASS	CONTROL ITEM ID	RC	CSCI	ORG
EMACS		19.30.9		program	b00015242	A	DCCI	IDG
IRIX 6.5.6m		6.5.6m		OS	b00072777		DCCI	IDG
	Interim files	6A		data	b00082152		STMGT	ECS
Legato Networker Client		6.0.2.Build.251		program	b00083212		MCI	MSS
MIPSpro C ++ Compiler		7.2.1.3m		program	b00014924		DCCI	IDG
MIPSpro C Compiler		7.2.1.3m		program	b00014873		DCCI	IDG
MIPSpro FORTRAN 77 Compiler		7.2.1.3m		program	b00015353		DCCI	IDG
MIPSpro FORTRAN 90 Compiler		7.2.1.3m		program	b00015383		DCCI	IDG
Open Client/C		12.0		program	b00015863		DCCI	DDM
PERL		5.005_03		program	b00015932	A	DCCI	IDG
ProDev Workshop		2.7		program	b00015990		DCCI	IDG
TCL/Tk		8.0_PL_4		program	b00015433		MCI	MSS
TCP Wrappers		7.6		program	b00016306		MCI	MSS
Tivoli: Lightweight Client		3.6.3		program	b00083164		MCI	MSS
Tripwire		1.3		program	b00016396		MCI	MSS
ssh secure shell cmrcl client		2.4		program	b00083342	A	DCCI	SED-HW
ssh secure shell cmrcl server		1.3.7		program	b00016256		DCCI	SED-HW

** e0drg11 ** DRPHW FSMS Server (P1) b00080540
Storage Management for Archive Data

--> FSMS Server (P1) S/W bndl-EDC b00081578 <

COTS/FREE/SHARE PRODUCT NAME	CUSTOM SW NAME	VERSION	CKSUM	ITEM SUBCLASS	CONTROL ITEM ID	RC	CSCI	ORG
AMASS		5.1.1		program	b00083480		STMGT	SED-HW
BDS		2.1p0		program	b00072750		DCCI	SED-HW
HiPPI SW		3.3.1		program	b00015453			SED-HW
Purify		5.3		program	b00083168		DCCI	IDG

--> FSMS Server (P1) S/W bundle b00081590 <

COTS/FREE/SHARE PRODUCT NAME	CUSTOM SW NAME	VERSION	CKSUM	ITEM SUBCLASS	CONTROL ITEM ID	RC	CSCI	ORG
DCE Client		1.2.2a		program	b00072756		DCCI	IDG
EMACS		19.30.9		program	b00015242	A	DCCI	IDG
IRIX 6.5.6m		6.5.6m		OS	b00072777		DCCI	IDG
SANergy		2.3.3		program	b00083585		SANSW	SYN

Version: See http://cmdm.east.hitc.com/baseline (Custom SW Lists button) for detailed versioning information about custom software
Ref Codes: A = automounted; I = remotely installed; P = platform; R = RAID (switchable); r = RAID (other)

COTS/FREE/SHARE PRODUCT NAME	CUSTOM SW NAME	VERSION	CKSUM	ITEM SUBCLASS	CONTROL ITEM ID	RC	CSCI	ORG
Legato Networker Client		6.0.2.Build.251		program	b00083212		MCI	MSS
MIPSpro C ++ Compiler		7.2.1.3m		program	b00014924		DCCI	IDG
MIPSpro C Compiler		7.2.1.3m		program	b00014873		DCCI	IDG
MIPSpro FORTRAN 77 Compiler		7.2.1.3m		program	b00015353		DCCI	IDG
MIPSpro FORTRAN 90 Compiler		7.2.1.3m		program	b00015383		DCCI	IDG
Network Time Services (NTP)		4.1		program	b00083620		DCCI	SED-HW
Open Client/C		12.0		program	b00015863		DCCI	DDM
PERL		5.005_03		program	b00015932	A	DCCI	IDG
ProDev Workshop		2.7		program	b00015990		DCCI	IDG
TCL/Tk		8.0_PL_4		program	b00015433		MCI	MSS
TCP Wrappers		7.6		program	b00016306		MCI	MSS
Tivoli: Lightweight Client		3.6.3		program	b00083164		MCI	MSS
Tripwire		1.3		program	b00016396		MCI	MSS
ssh secure shell cmrcl client		2.4		program	b00083342	A	DCCI	SED-HW
ssh secure shell cmrcl server		1.3.7		program	b00016256		DCCI	SED-HW

** e0drg12 ** DRPHW FSMS Server (P2) b00080542
Storage Management for Archive Data

- - > FSMS Server (P2) S/W bndl-EDC b00081592 < - - -

COTS/FREE/SHARE PRODUCT NAME	CUSTOM SW NAME	VERSION	CKSUM	ITEM SUBCLASS	CONTROL ITEM ID	RC	CSCI	ORG
AMASS		5.1.1		program	b00083480		STMGT	SED-HW
BDS		2.1p0		program	b00072750		DCCI	SED-HW
HiPPI SW		3.3.1		program	b00015453			SED-HW
Purify		5.3		program	b00083168		DCCI	IDG

- - > FSMS Server (P2) S/W bundle b00081602 < - - -

COTS/FREE/SHARE PRODUCT NAME	CUSTOM SW NAME	VERSION	CKSUM	ITEM SUBCLASS	CONTROL ITEM ID	RC	CSCI	ORG
ClearCase		3.2.1		program	b00015005		MLCI	MSS
DCE Client		1.2.2a		program	b00072756		DCCI	IDG
EMACS		19.30.9		program	b00015242	A	DCCI	IDG
IRIX 6.5.6m		6.5.6m		OS	b00072777		DCCI	IDG
Legato Networker Client		6.0.2.Build.251		program	b00083212		MCI	MSS
MIPSpro C ++ Compiler		7.2.1.3m		program	b00014924		DCCI	IDG
MIPSpro C Compiler		7.2.1.3m		program	b00014873		DCCI	IDG
MIPSpro FORTRAN 77 Compiler		7.2.1.3m		program	b00015353		DCCI	IDG
MIPSpro FORTRAN 90 Compiler		7.2.1.3m		program	b00015383		DCCI	IDG
Network Time Services (NTP)		4.1		program	b00083620		DCCI	SED-HW
Open Client/C		12.0		program	b00015863		DCCI	DDM
PERL		5.005_03		program	b00015932	A	DCCI	IDG
ProDev Workshop		2.7		program	b00015990		DCCI	IDG
TCL/Tk		8.0_PL_4		program	b00015433		MCI	MSS
TCP Wrappers		7.6		program	b00016306		MCI	MSS
SANergy		2.3.3		program	b00083585		SANSW	SYN

Version: See http://cmdm.east.hitc.com/baseline (Custom SW Lists button) for detailed versioning information about custom software
Ref Codes: A = automounted; I = remotely installed; P = platform; R = RAID (switchable); r = RAID (other)

COTS/FREE/SHARE PRODUCT NAME	CUSTOM SW NAME	VERSION	CKSUM	ITEM SUBCLASS	CONTROL ITEM ID	RC	CSCI	ORG
Gnu Unzip		1.2.4		program	b00015411	A	DCCI	IDG
Gnu Zip		1.2.4		program	b00015410	A	DCCI	IDG
JAF		1.0		program	b00083680			SED
JavaMail		1.1		program	b00083520			SYN
Legato Networker Client		6.0.2.Build.251		program	b00083214		MCI	MSS
Network Time Services (NTP)		4.0		program	b00083176			SED-HW
PERL		5.005-03		program	b00015930	A	DCCI	IDG
Solaris 2.5.1		2.5.1		OS	b00016160		DCCI	IDG
TCL/Tk		8.0_PL_4		program	b00015434		MCI	MSS
TCP Wrappers		7.6		program	b00016305		MCI	MSS
Tivoli: Lightweight Client		3.6.3		program	b00083162		MCI	MSS
Tripwire		1.3.1		program	b00083174		MCI	MSS
jre		1.2.1		program	b00015642		WKBCH	CLS
ssh secure shell cmrcl client		2.4		program	b00083340	A	DCCI	SED-HW
ssh secure shell cmrcl server		1.3.7		program	b00016258		DCCI	SED-HW

EDC SYN Subsystem

** e0dps01 ** DPCI Data Pool Server b00083690

- - > Data Pool Server S/W Bndl-EDC b00083696 < - - -
(No reportable software items in bundle)

- - > Data Pool Server S/W Bundle b00083692 < - - -

COTS/FREE/SHARE PRODUCT NAME	CUSTOM SW NAME	VERSION	CKSUM	ITEM SUBCLASS	CONTROL ITEM ID	RC	CSCI	ORG
Apache Web Server		1.3.22		program	b00083356			SYN
FIND_DDOS		4.2		program	b00083462		DCCI	SED
JDBC API		2.0		program	b00083350			SYN
JDOM		1.0beta7		program	b00083346			SYN
JetDirect		E.10.18		program	b00083454		DCCI	IDG
Network Time Services (NTP)		4.1		program	b00083616		DCCI	SE
PERL		5.6.1		program	b00083632		DCCI	IDG
SANergy		2.2.3		program	b00083584		SANSW	SYN
Solaris 8		8 upd.0202		OS	b00083648		DCCI	IDG
Tomcat		3.2.3		program	b00083358			SYN
Top		3.5 beta12		program	b00083646		DCCI	IDG
Velocity		1.2		program	b00083666			SYN
WebGLIS		3.2.1		program	b00083354			SYN
iPlanet Web Server		6.0		program	b00083434		WKBCH	CLS
jConnect		5.2 (EBF 9747)		program	b00083360		BMGT	DDM

** e0sas01 ** SANHW Metadata Server b00083542

- - > Metadata Server S/W bndl-EDC b00083556 < -
(No reportable software items in bundle)

- - > Metadata Server S/W bundle b00083554 < -

COTS/FREE/SHARE PRODUCT NAME	CUSTOM SW NAME	VERSION	CKSUM	ITEM SUBCLASS	CONTROL ITEM ID	RC	CSCI	ORG
Gigabit Ethernet		3.0		program	b00083580		SANSW	SED-HW
JNI		4.0		program	b00083586		SANSW	SYN
Legato Networker Client		6.0.2.Build.251		program	b00083214		MCI	MSS
QFS		3.5.0-41A		program	b00083582		SANSW	SYN
RDAC		07.10.GG.00		program	b00083590		SANSW	SYN
SANergy		2.2.3		program	b00083584		SANSW	SYN
SYMplicity Storage Manager		07.10.GG.02		program	b00083588		SANSW	SYN
Solaris 8		8 upd.0202		OS	b00083648		DCCI	IDG

SANtricity 8.06.62.01

Version: See http://cmdm.east.hitc.com/baseline (Custom SW Lists button) for detailed versioning information about custom software
Ref Codes: A = automounted; I = remotely installed; P = platform; R = RAID (switchable); r = RAID (other)

From:

920-TDE-004

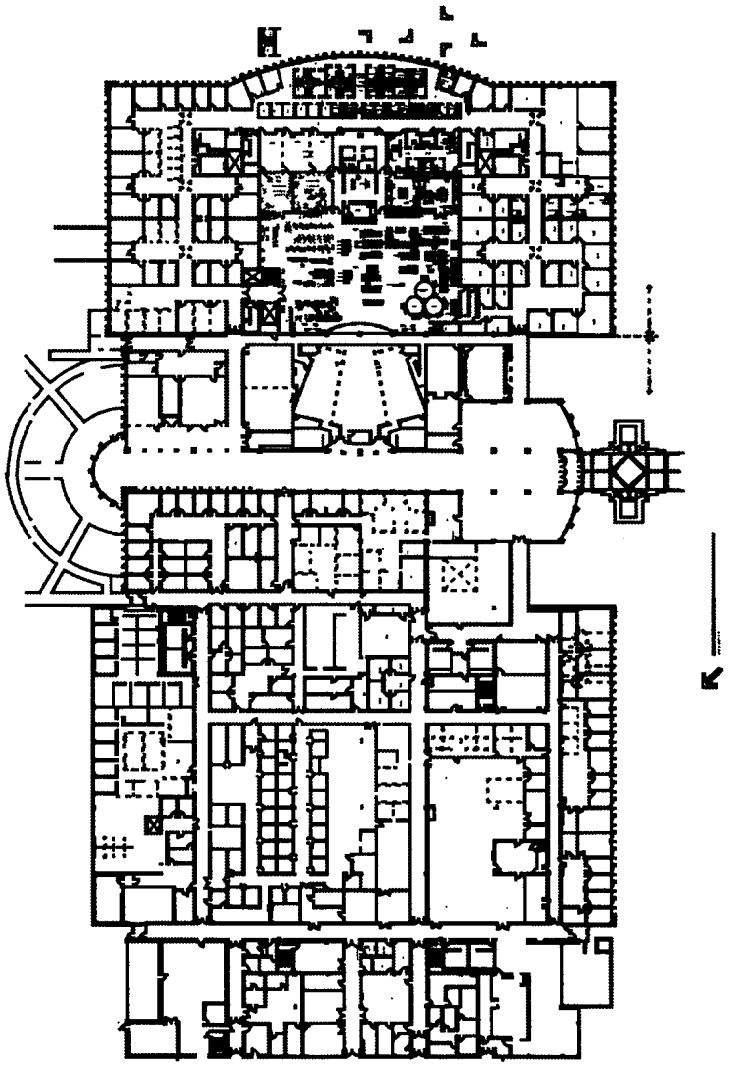

ADD RAID RACK
TO COMPUTER ROOM